Electrolux PROFESSIONAL

Modular Cooking Range Line 700XP 6-Burner Gas Range on Large Gas Oven

ITEM #

MODEL #

NAME #

SIS #

AIA #



371215 (E7GCGI6CL0) 6-Burner (5,5 kW each) gas Range on large gas Oven (9 kW)

Short Form Specification

Item No.

Unit to be Electrolux 700XP six 5.5 kW gas burner range on large gas oven. Unit to be installed on stainless steel feet with height adjustment up to 50 mm. High efficiency flower flame burners with optimized combustion. Flame failure device as standard on burners to protect against accidental extinguishing. Oven chamber with 4 levels of runners to accomodate 2/1 GN shelves (2 steam pans). Unit to have enamelled steel oven base plate. Exterior panels of unit in Stainless steel with Scotch Brite finish. Pan supports in heavy duty cast iron. Extra strength work top in heavy duty 2 mm Stainless steel. Unit has right-angled side edges to allow flush-fitting junction between units.

APPROVAL:

Main Features

- Unit to be mounted on stainless steel feet with height adjustment up to 50 mm. Unit can be easily mounted on cantilever systems.
- Gas appliance supplied for use with natural or LPG gas, conversion jets supplied as standard.
- Large sized pan support in cast iron (stainless steel as option) with long center fins to allow the use of the largest down to the smallest pans.
- Burners with optimized combustion.
- Flame failure device on each burner protects against gas leakage when accidental extinguishing of the flame occurs.
- Protected pilot light.
- 40 mm thick oven door for heat insulation.
- The special design of the control knob system guarantees against water infiltration.
- IPX5 water protection.
- Maximum temperature of 300°C.
- Ribbed enamelled steel oven base plate.
- Base compartment consists of a gas heated standard oven with stainless steel burners and self stabilizing flame positioned beneath the base plate.
- The six 5.5 kW high efficiency flower flame burners allow the flame to adapt to different size pans.

Construction

- All exterior panels in Stainless Steel with Scotch Brite finishing.
- Model has right-angled side edges to allow flush fitting joints between units, eliminating gaps and possible dirt traps.
- Unit is 730mm deep to give a larger working surface area

Optional Accessories

- GN2/1 chrome grid for static oven PNC 164250 ❑
- Junction sealing kit PNC 206086 ❑
- Kit 4 wheels - 2 swivelling with brake - it is mandatory to install Base support and wheels PNC 206135 ❑
- Flanged feet kit PNC 206136 ❑
- Flue condenser for 1 module, 150 mm diameter PNC 206246 ❑
- Single burner smooth plate for direct cooking - fits frontal burners only PNC 206260 ❑
- Single burner ribbed plate for direct cooking- fits frontal burners only PNC 206261 ❑

• Single burner radiant plate for pan support	PNC 206264	❑
• Pair of side kicking strips for concrete installation	PNC 206265	❑
• Water column with swivel arm (water column extension not included)	PNC 206289	❑
• Stainless steel double grid for 2 burners	PNC 206297	❑
• Right and left side handrails	PNC 206307	❑
• Flue condenser for 1/2 module, 120 mm diameter	PNC 206310	❑
• Wok pan support for open burners (700/900)	PNC 206363	❑
• Base support for feet or wheels (lateral) for 6-burners with large oven 900mm, pasta cookers and refrigerated bases (700XP)	PNC 206371	❑
• Rear paneling - 1200mm (700/900)	PNC 206376	❑
• Chimney grid net, 500mm (700XP/900)	PNC 206402	❑
• 2 side covering panels for free standing appliances	PNC 216000	❑
• Pressure regulator for gas units	PNC 927225	❑

CE

The company reserves the right to make modifications to the products without prior notice. All information correct at time of printing.

Modular Cooking Range Line 700XP 6-Burner Gas Range on Large Gas Oven

Front

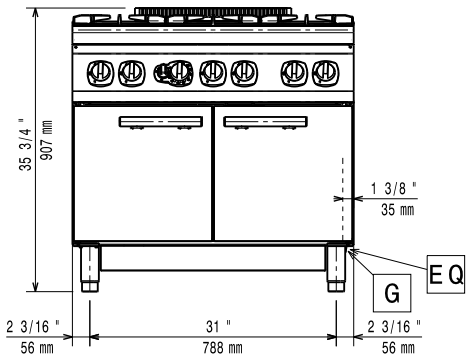

Side

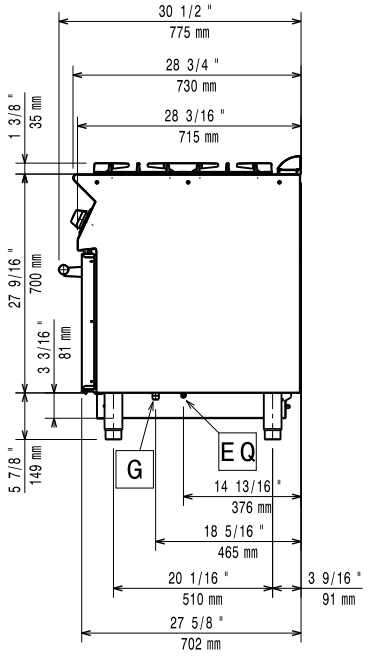

G = Gas connection

Top

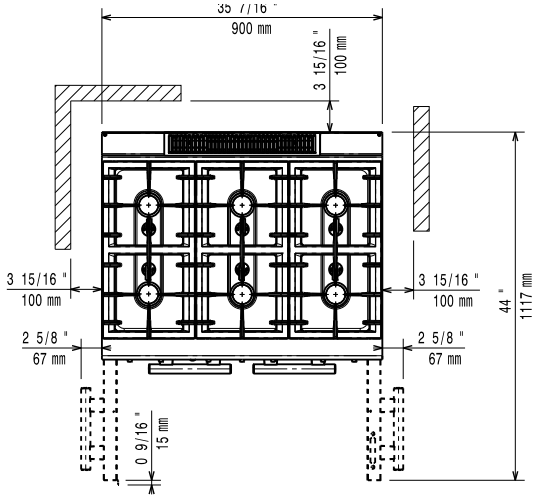

Gas

LPG Gas G30/G31 (28-30/37mbar)

Gas Power:	42 kW
Standard gas delivery:	Natural Gas G20 (20mbar)
Gas Type Option:	LPG;Town
Gas Inlet:	1/2"

Key Information:

Oven working Temperature:	110 °C MIN; 300 °C MAX
Oven Cavity Dimensions (width):	760 mm
Oven Cavity Dimensions (height):	390 mm
Oven Cavity Dimensions (depth):	540 mm
Net weight:	106 kg
Shipping weight:	128 kg
Shipping height:	1100 mm
Shipping width:	1000 mm
Shipping depth:	820 mm
Shipping volume:	0.9 m³
Front Burners Power:	5.5 - 5.5 kW
Back Burners Power:	5.5 - 5.5 kW
Middle Burners Power:	5.5 - 0/5.5 - 0 kW
[NOT TRANSLATED]	N7CG
Back Burners Dimension - mm	Ø 60 Ø 60
Front Burners Dimension - mm	Ø 60 Ø 60
Middle Burners Dimension - mm	Ø 60 Ø 60

If appliance is set up or next to or against temperature sensitive furniture or similar, a safety gap of approximately 150 mm should be maintained or some form of heat insulation fitted.

The company reserves the right to make modifications to the products without prior notice. All information correct at time of printing.

2026.11.20